Dimension Drawing - Lynx Smart BMS	
LYN034160200	Lynx Smart BMS 500

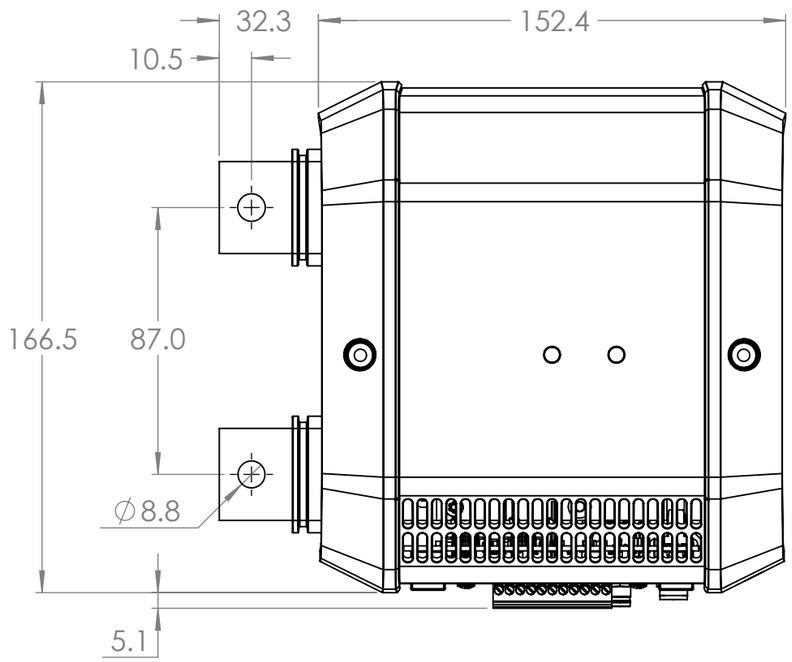

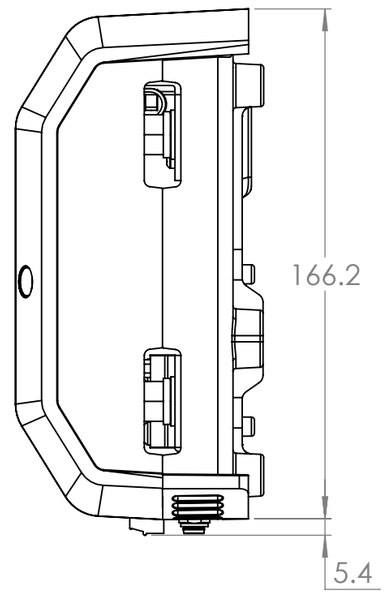

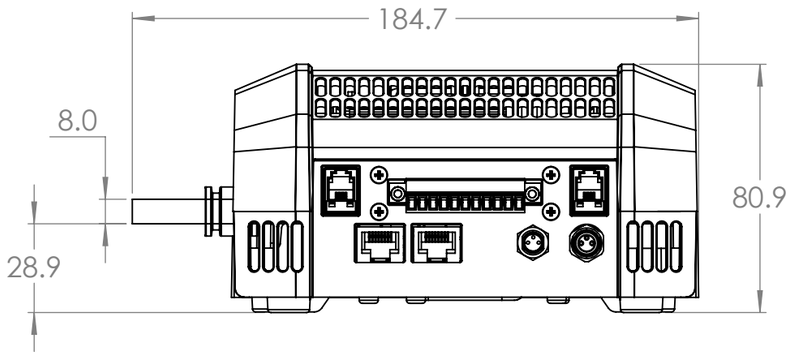

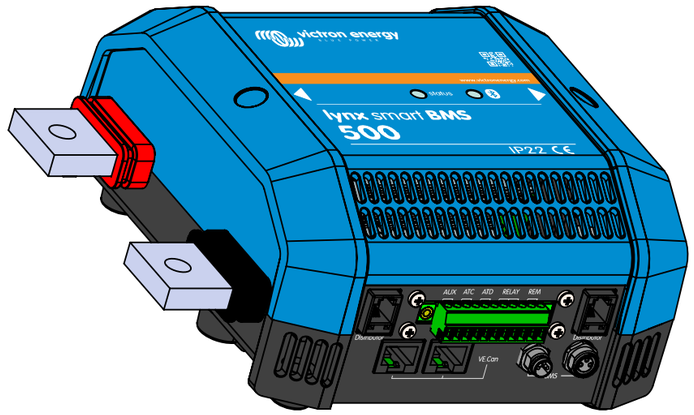

Dimensions in mm

victron energy
BLUE POWER

Rev02