Dimension Drawing - SS MPPT 450/100	
SCC145110410	SmartSolar MPPT 450/100-Tr VE.Can

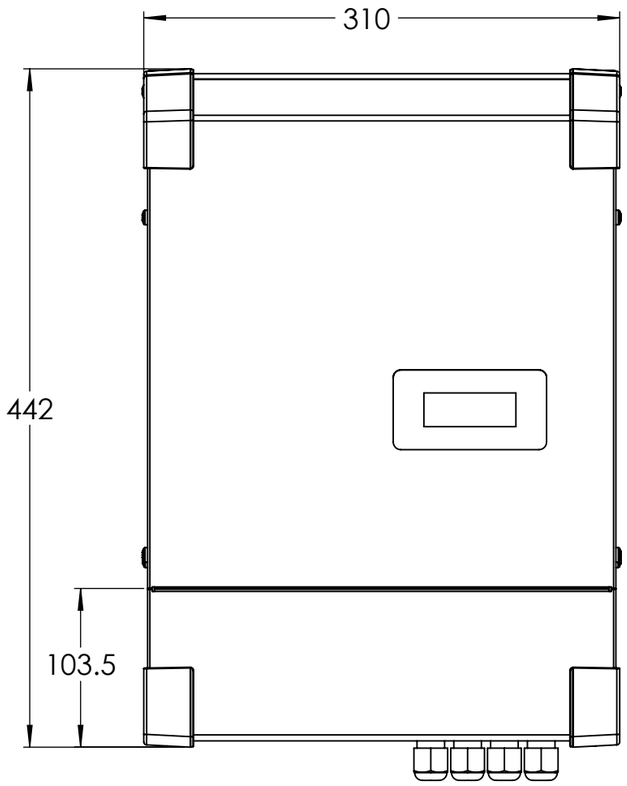

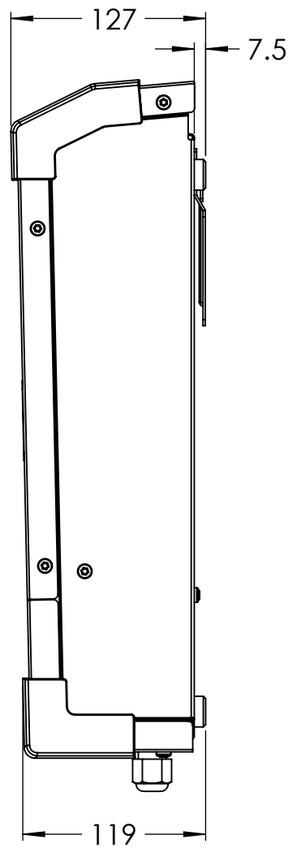

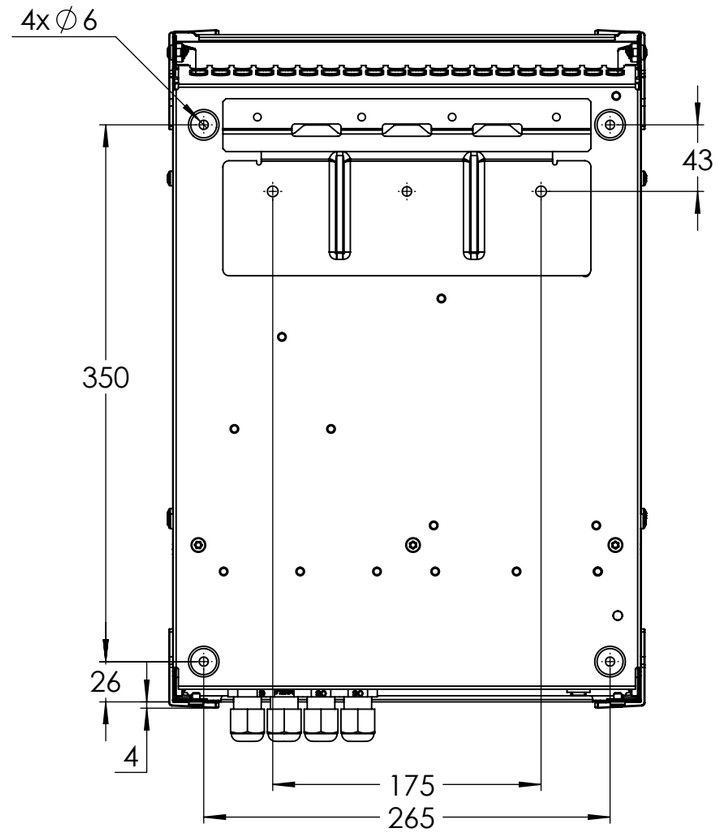

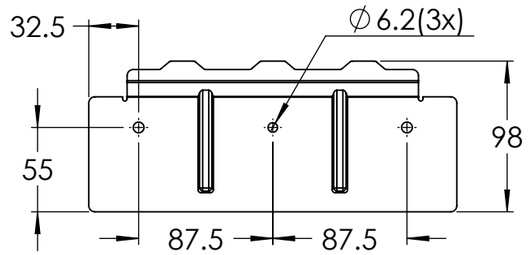

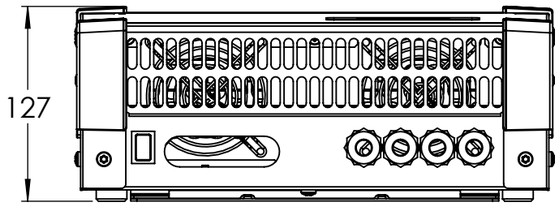

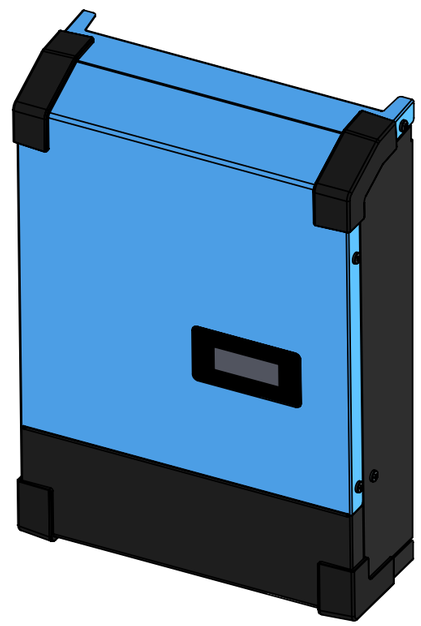

Dimensions in mm

victron energy
BLUE POWER